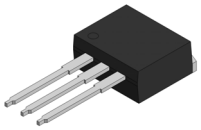

I2PAK (TO−262 3 LD)
CASE 418AV
ISSUE A

DATE 30 AUG 2022

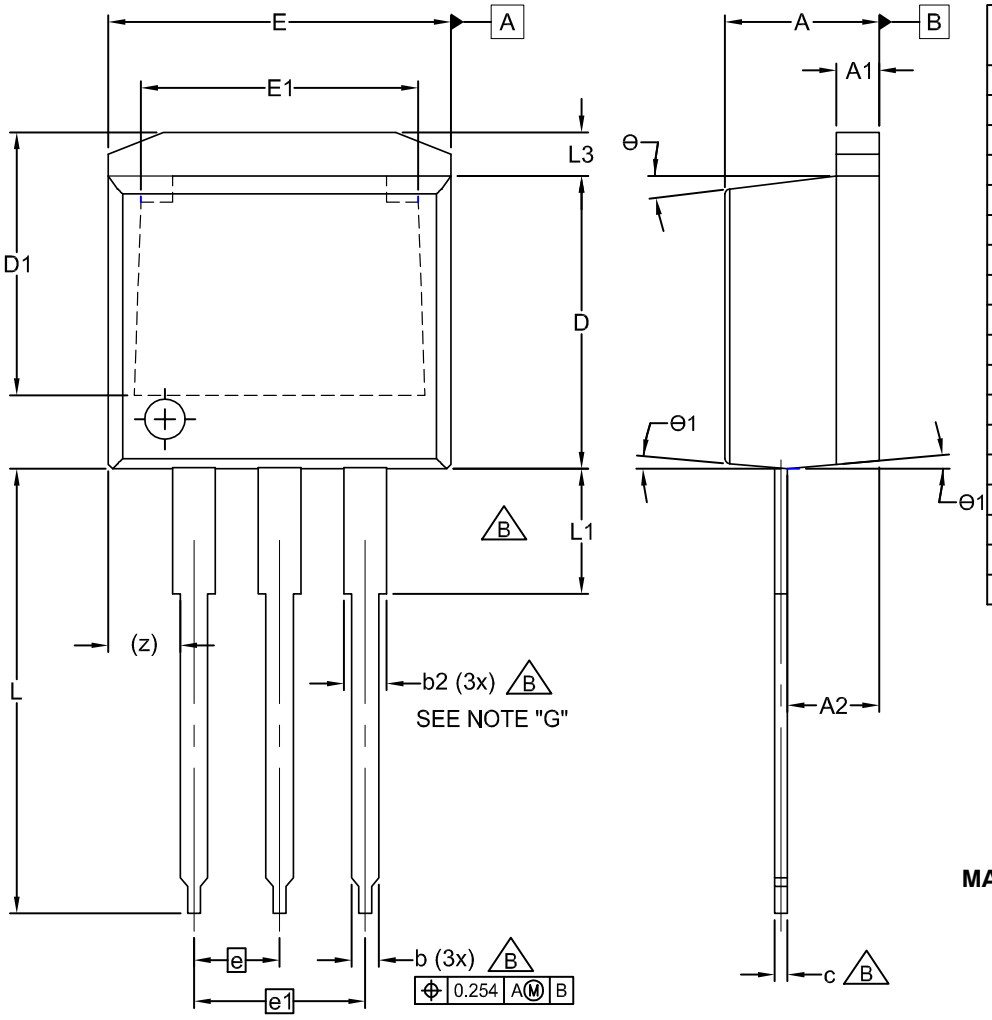

DIM	MILLIMETERS		
	MIN	NOM	MAX
A	4.06	4.45	4.83
A1	1.14	1.27	1.40
A2	2.03	2.41	2.79
b	0.64	0.77	0.90
b2	1.14	1.46	1.78
c	0.33	0.49	0.64
D	8.64	9.15	9.65
D1	6.86	7.37	7.88
E	9.65	9.97	10.29
E1	6.22	7.28	8.33
e	2.54 BSC		
e1	5.08 BSC		
L	12.70	13.72	14.73
L1	2.80	3.38	3.96
L3	1.00	1.20	1.40
z	2.13 REF		
Θ	0°	--	7°
Θ1	0°	--	5°

NOTES:

A. EXCEPT WHERE NOTED CONFORMS TO TO262 JEDEC VARIATION AA.
B. DOES NOT COMPLY JEDEC STD. VALUE.
C. ALL DIMENSIONS ARE IN MILLIMETERS.
D. DIMENSIONS ARE EXCLUSIVE OF BURRS, MOLD FLASH AND TIE BAR PROTRUSIONS.
E. DIMENSION AND TOLERANCE AS PER ANSI Y14.5-1994.
F. LOCATION OF PIN HOLE MAY VARY (LOWER LEFT CORNER, LOWER CENTER AND CENTER OF PACKAGE)
G. MAXIMUM WIDTH FOR F102 DEVICE = 1.35 MAX.

GENERIC MARKING DIAGRAM*

AYWWZZ
XXXXXXXXX
XXXXXXXXX
o

XXXX = Specific Device Code
A = Assembly Location
Y = Year
WW = Work Week
ZZ = Assembly Lot Code

*This information is generic. Please refer to device data sheet for actual part marking. Pb−Free indicator, "G" or microdot "▪", may or may not be present. Some products may not follow the Generic Marking.

DOCUMENT NUMBER:	**98AON13814G**	Electronic versions are uncontrolled except when accessed directly from the Document Repository. Printed versions are uncontrolled except when stamped "CONTROLLED COPY" in red.
DESCRIPTION:	**I2PAK (TO−262 3 LD)**	**PAGE 1 OF 1**

onsemi and onsemi are trademarks of Semiconductor Components Industries, LLC dba **onsemi** or its subsidiaries in the United States and/or other countries. **onsemi** reserves the right to make changes without further notice to any products herein. **onsemi** makes no warranty, representation or guarantee regarding the suitability of its products for any particular purpose, nor does **onsemi** assume any liability arising out of the application or use of any product or circuit, and specifically disclaims any and all liability, including without limitation special, consequential or incidental damages. **onsemi** does not convey any license under its patent rights nor the rights of others.